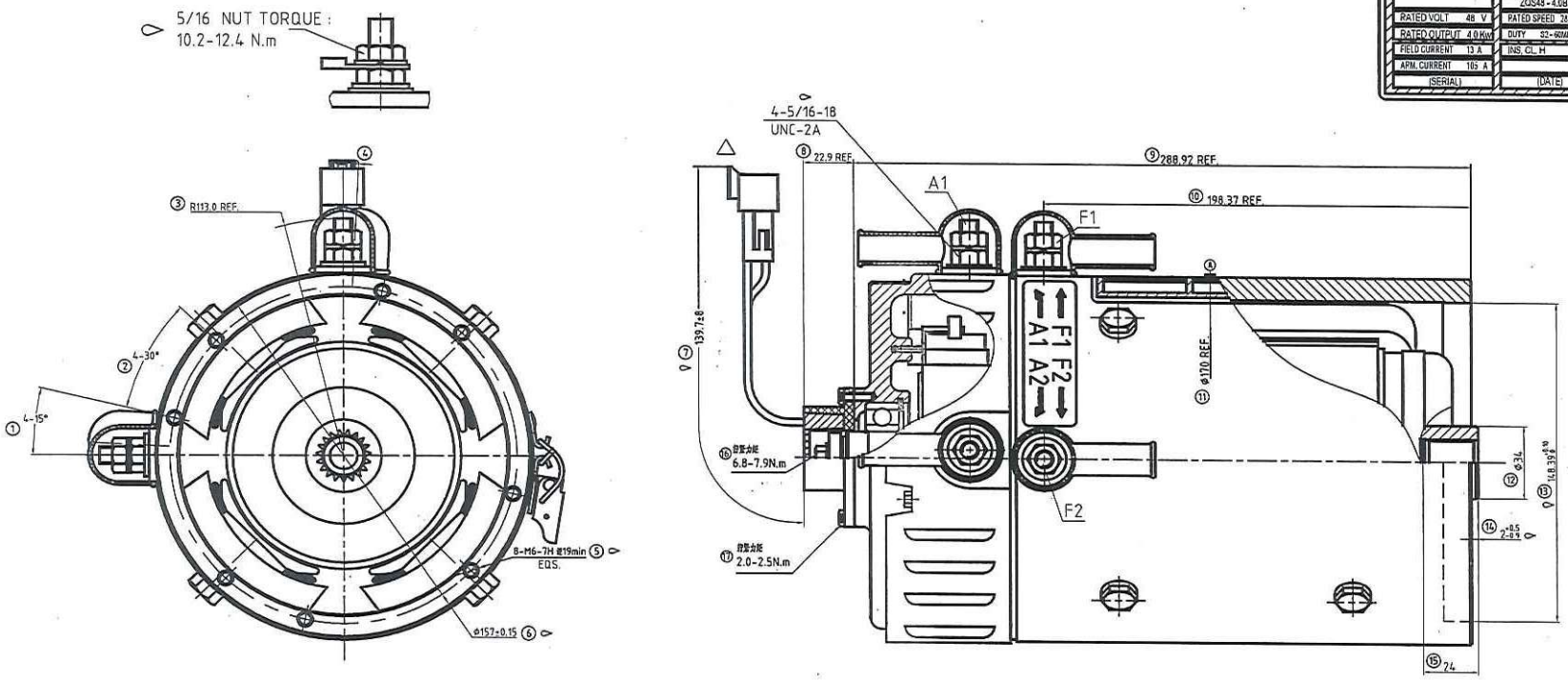

KDS A Lenoxa Company	KINETEK DE SHENG MOTOR CO., LTD.
	ZQS48-4.0B-T
RATED VOLT 48 V	RATED SPEED 2800 r/min
RATED OUTPUT 4.0 Kw	DUTY S2-60MIN.
FIELD CURRENT 13 A	INS. CL. H
APM. CURRENT 105 A	
(SERIAL)	(DATE)

⑱ ⌓ INTERNAL INVOLUTE SPLINE
FILLET ROOT SIDE FIT
PER ANSI B92. CLASS 5

NUMBER OF TEETH	19
SPLINE PITCH	24/48
PRESSURE ANGLE	45°
BASE DIAMETER	0.5597 [14.216] REF
PITCH DIAMETER	0.7916 [20.107] REF
MAJOR DIAMETER	0.850-0.859 [21.59-21.82]
FORM DIAMETER	0.835 [21.21]
MINOR DIAMETER	0.767-0.772 [19.48-19.61]
MAX ACTUAL	0.0764 [1.941]
MINEFFECTIVE	0.0738 [1.875]
MAX DIMENSION BETWEEN TWO PINS	0.6714 [17.054]
SPLINE PITCH	0.0800 [2.032]

传感器工作温度-20℃-85℃.
SENSOR OPERATING TEMPERATURE - 20 ℃ - 85 ℃.
传感器拉转电流25mA
SENSOR LOSS CURRENT 25mA
传感器工作电压4.5-24v.
SENSOR RATED VOLTAGE 4.5-24V
传感器室和磁钢配合间隙及磁钢跳动不超过0.8mm
SENSOR HOUSE AND MAGNETIC FIT CLEARANCE AND MAGNETIC RUNOUT WITHIN 0.8mm

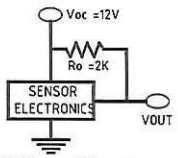

红色(RED)—— 正极(INPUT)
黑色(BLACK)—— 负极(GROUND)
绿色(GREEN)—— 输出(OUTPUT)

旋转方向:可逆转(从花轮端看)
ROTATION-REVERSIBLE
顺时针旋转时:A2和F2接到电池一端;A1和F1接到电池另一端.
C.W.D.E: CONNECT A2 AND F2 TO ONE BATTERY TERMINAL.CONNNECT A1 AND F1 TO OTHER BATTERY TERMINAL.
逆时针旋转时:A2和F1接到电池一端;A1和F2接到电池另一端.
C.C.W.D.E: CONNECT A2 AND F1 TO ONE BATTERY TERMINAL.CONNNECT A1 AND F2 TO OTHER BATTERY TERMINAL.

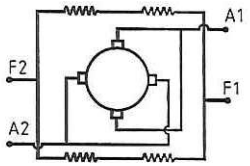

接线图 WIRING DIAGRAM

技术要求 NOTES
1.电机为H级绝缘,额定电压为48V。
CLASS H, 48 VDC RATED VOLTAGE.
2.机座涂黑漆。
BLACK PAINT FRAME.
3.日期代码打印在机座表面,用铭牌盖住。
DATE CODE STAMPED ON FRAME, COVERED BY LABEL.
4.除标有"⌓"的尺寸外,其余为参考尺寸。
ALL DIMENSIONS ARE FOR REFERENCE UNLESS SIGNED BY "⌓".
5."△"为变更处。
"△" IS UPDATE SIGN.

4	140159	潘志龙	5/15/14
3	140116	潘志龙	4/10/14
2	130548	潘志龙	12/30/13
版本 REV.	更改文件号 ECN NO.	签字 APPR	日期 DATE
制图 DRWN. BY:	潘志龙	工艺 M.TECH.BY:	杨嘉民
校对 CHK. BY:	李德全	批准 APPR. BY:	邓国强
审核 REVW. BY:	杨文平	日期 DATE:	11/23/13

ZQS48 - 4.0B - T
TRACTION MOTOR OUTLINE

图号 DRW.#	0SD.300.354	版本 REV. 4
重量 WEIGHT	比例 SCALE 1:1	幅面 SIZE A2

金泰德胜电机有限公司
KINETEK-DS MOTOR CO.,LTD