JK801 / JK802

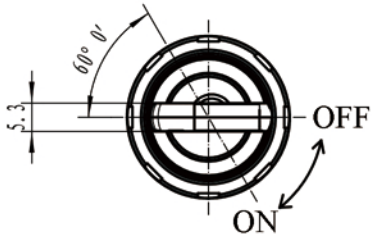

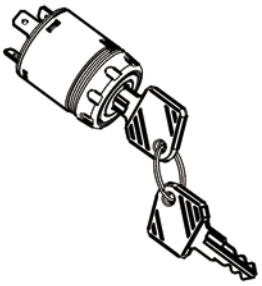

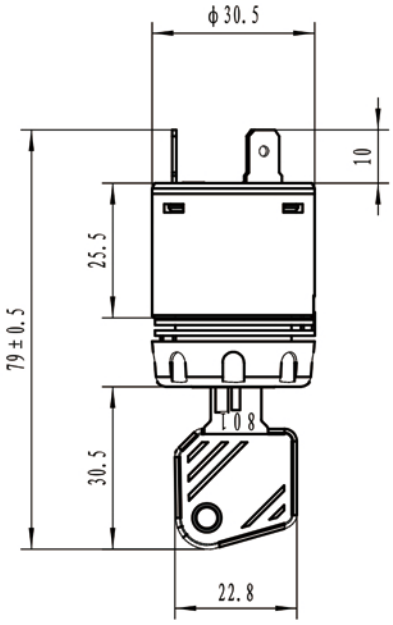

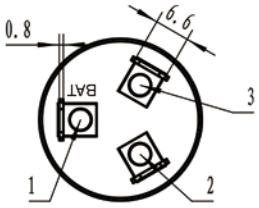

Specification:

1. JK801: uniformed key for all switches
2. JK802: unique key for each switch
3. 2 keys for each switch

Technical Requirement:

1. Can be pulled out easily at OFF position
   Pulling force ≤ 2 kgf (19.6 N)
2. Can be turned freely between OFF and ON positions
   Turning force ≤ 4.5 kgf (44 N)
3. Electric load capacity:
   a) Pin 1 (BAT): 4.0 amperes max.
   b) Pin 2: 2.5 amperes max.
   c) Pin 3: 1.5 amperes max.
   d) Total power rate: ≤ 180 watts
4. No flaw at surface
5. Life span: ≥ 50,000 times @ full load
6. Compliance with standard QC/T504-1999

Working Principle:

Position \ Pin	1	2	3
OFF			
ON	○	○	○

标记	处数	更改文件名	签字	日期
设计				
			日期	

图样标记	重量	比例
		1:1
共 张	第 张	

www.noco-evco.com

Key Operated Switch

JK801 / JK802